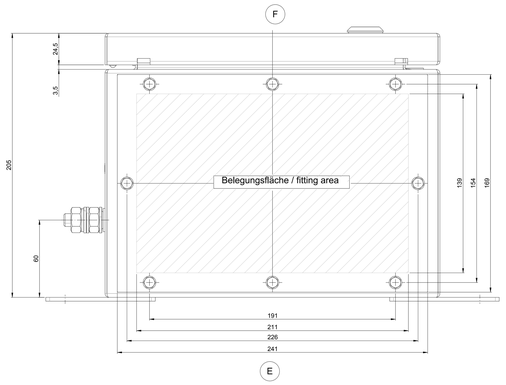

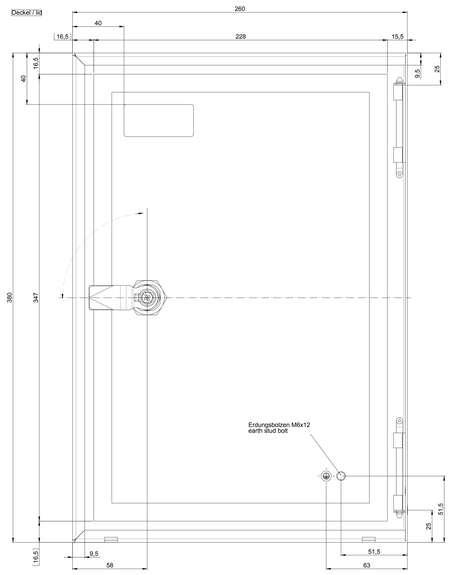

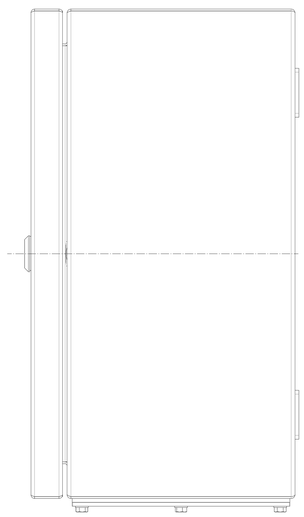

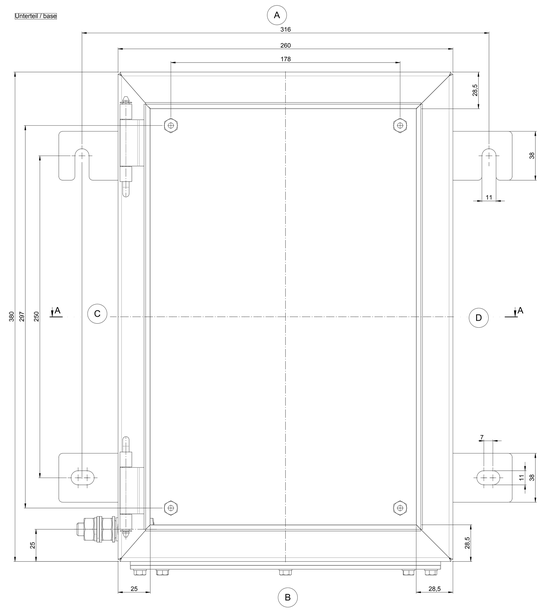

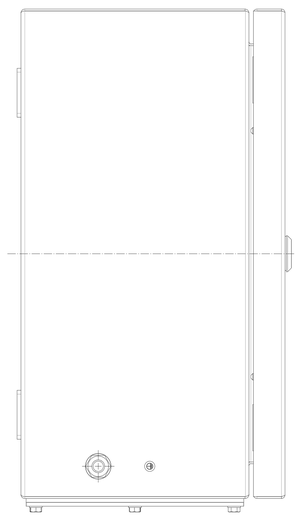

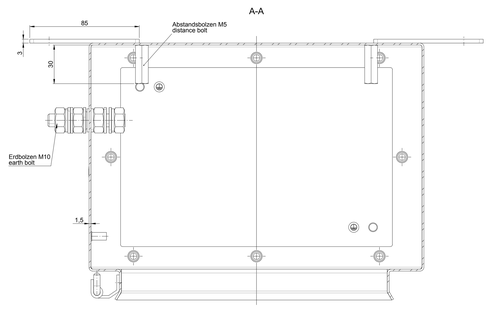

ProtEx Standardgehäuse 04
KAT34.040400
KAT34.060400